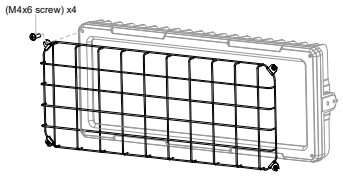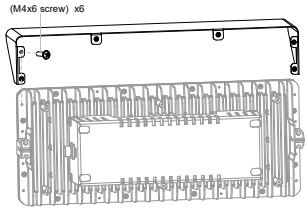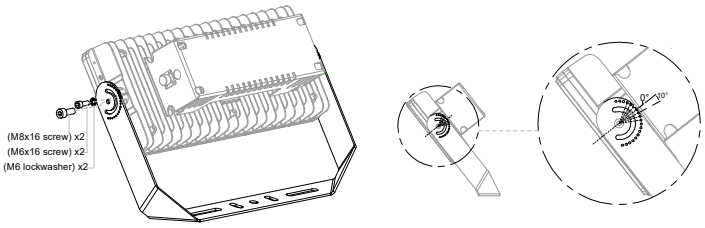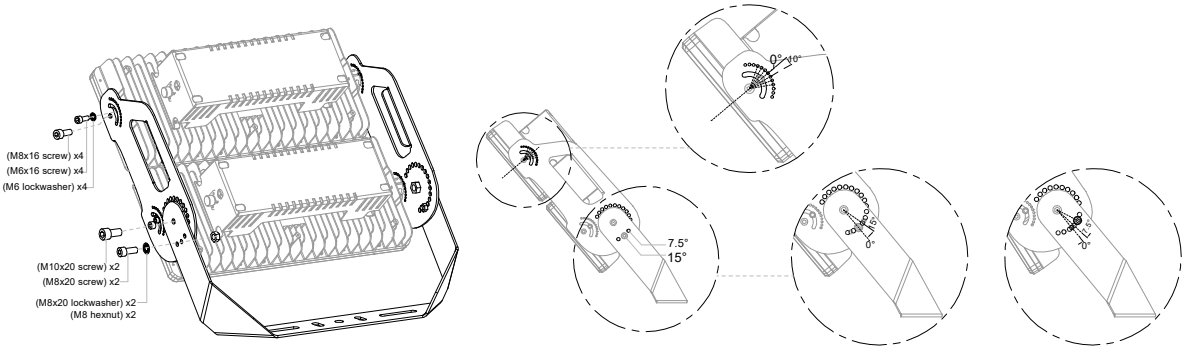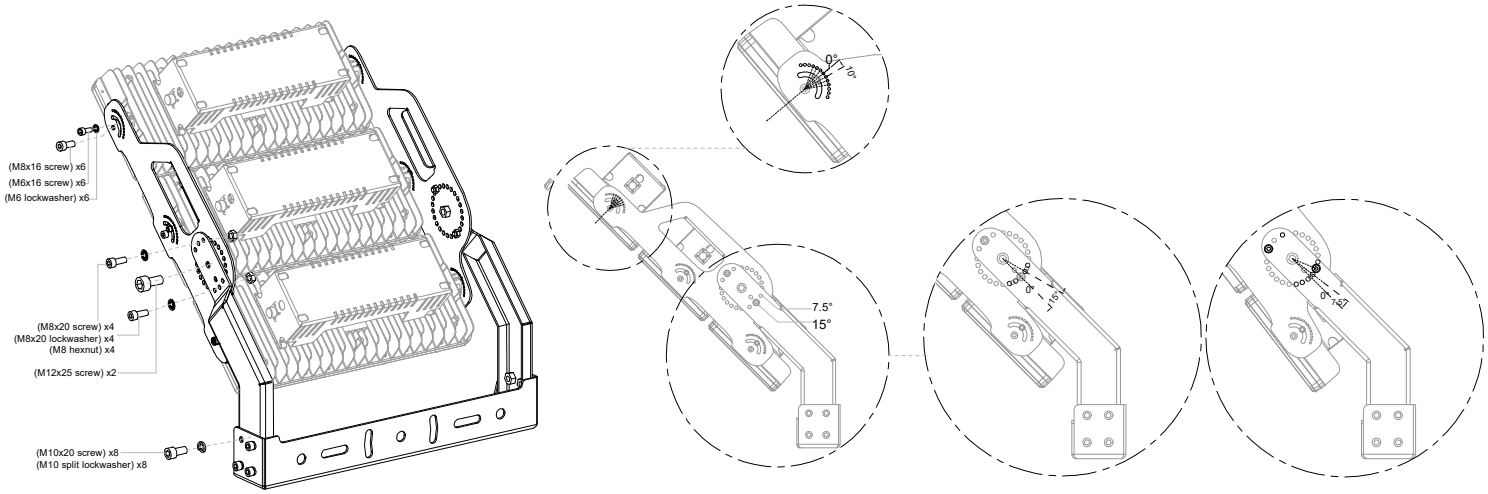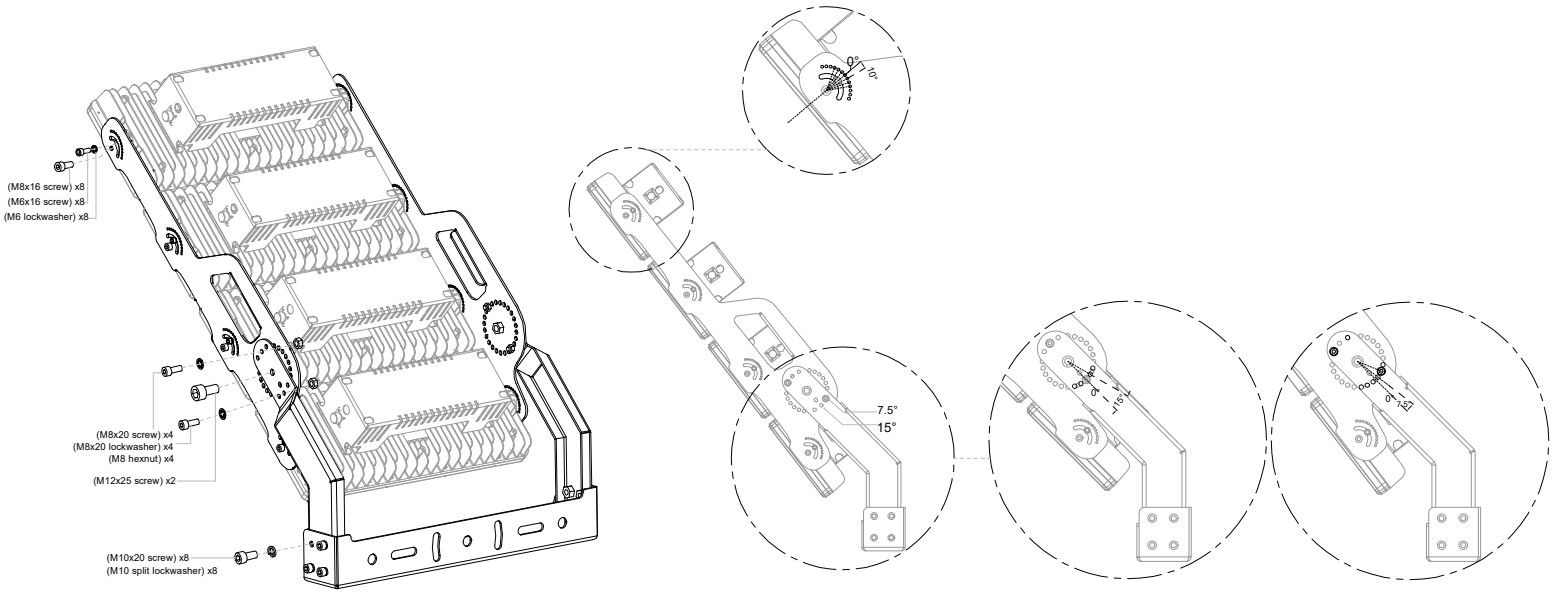Assembly instructions